Video-inserter
(RL4-R40)
InCarTec item 27-565

Example

Compatible with
Opel vehicles with R4.0 IntelliLink system
and 7inch monitor with DIN-cage attached

Video-inserter for front- and rear-view camera
and two additional video inputs

Product features

- **Video-inserter for factory infotainment systems**
- **1 CVBS Input for rear-view camera**
- **1 CVBS Input for front camera**
- **2 CVBS Video-inputs for after-market Video sources (e.g. USB-Player, DVB-T2 Tuner)**
- **Automatic switching to rear-view camera input on engagement of reverse gear**
- **Automatic front camera switching after reverse gear for 10 seconds**
- **Activatable parking guide lines for the rear-view camera (not available for all vehicles)**
- **Activatable PDC (not available for all vehicles)**
- **Video-in-motion in drive mode (ONLY for connected video-sources)**
- **Video-inputs NTSC compatible**

Contents

1. Prior to installation

1.1. Delivery contents
1.2. Checking the compatibility of vehicle and accessories
1.3. Connection Video-Interface
1.4. Settings of the 8 Dip switches (black)
1.4.1. Adjustment – power supply output (dip 1)
1.4.2. Enabling the interface's video inputs (dip 2-3)
1.4.3. Rear-view camera setting (dip 5)
1.4.4. Activating – front camera back switching (dip 6)
1.5. Settings of the 4 Dip switches (CAN function – red)

2. Installation

2.1. Place of connection
2.1.1. Place of connection – video interface
2.1.2. Place of installation –daughter PCB
2.2. Connection schema
2.3. Connection to the head-unit
2.3.1. Installation of the Exchange – retaining plate and the daughter PCB
2.3.2. Connecting ribbon cables
2.3.2.1. Ribbon cable – 66pin
2.3.2.2. Warning notes, concerning the installation of ribbon cables
2.4. Connection from monitor to the video interface
2.5. Connection to the head-unit – Power / CAN
2.6. Power supply output
2.7. Connection - video sources
2.7.1. Audio-insertion
2.7.2. After-market front camera
2.7.3. After-market rear-view camera
2.7.3.1. Case 1: Video-interface receives the reverse gear signal
2.7.3.2. Case 2: Video interface does not receive the reverse gear signal
2.8. Connecting video-interface and external keypad
2.9. Picture settings and guide lines

3. Interface operation

3.1. By CALL OFF button
3.2. By keypad

4. Specifications

5. FAQ – Trouble shooting

6. Technical support

Legal Information

By law, watching moving pictures while driving is prohibited, the driver must not be distracted. We do not accept any liability for material damage or personal injury resulting, directly or indirectly, from installation or operation of this product. Apart from using this product in an unmoved vehicle, it should only be used to display fixed menus or rear-view-camera video when the vehicle is moving (for example the MP3 menu for DVD upgrades).

Changes/updates of the vehicle's software can cause malfunctions of the interface. Up to one year after purchase we offer free software-updates for our interfaces. To receive a free update, the interface has to be sent in at own cost. Wages for de-and reinstallation and other expenditures involved with the software-updates will not be refunded.

1. Prior to installation

Read the manual prior to installation. Technical knowledge is necessary for installation. The place of installation must be free of moisture and away from heat sources.

1.1. Delivery contents

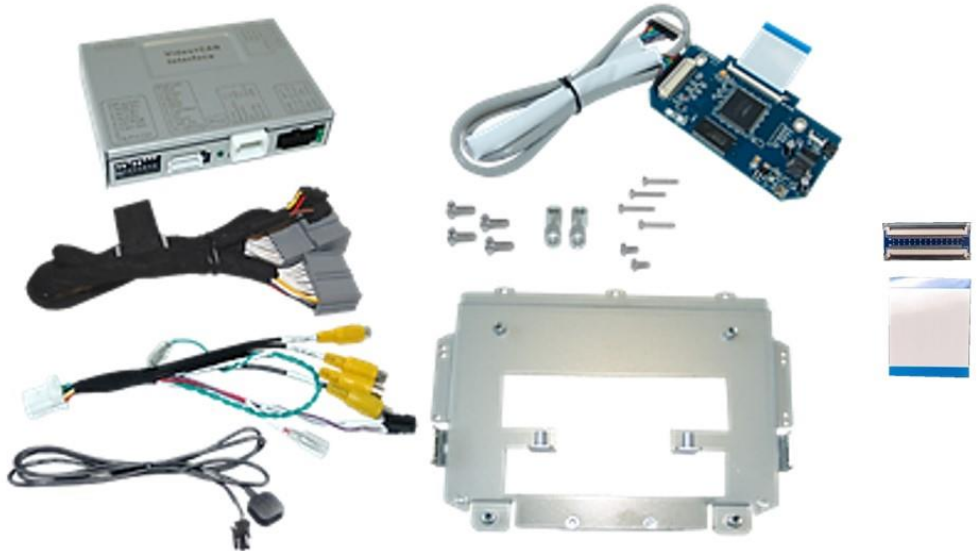

Take down the serial number of the interface and store this manual for support purposes: _____

1.2. Checking the compatibility of vehicle and accessories

Compatibility

Brand	Compatible vehicles	Infotainment systems
Opel	Adam Corsa E until 06/2019 Crossland X since model year 2017 (no GM-LAN) Grandland X since model year 2017 (no GM-LAN) Mokka X model year 2016-2020 Zafira C since model year 2017	R4.0 IntelliLink - 7" monitor with DIN-cage attached

Limitations

Video only	The interface inserts ONLY video signals into the infotainment. For audio inserting, use the possibly existing factory audio-AUX-input or a FM-modulator. If 2 AV-sources shall be connected to the infotainment, for audio switching an additional electronic part is required.
Factory rear-view camera	Automatic switching-back from inserted video to factory rear-view camera is only possible while the reverse gear is engaged. To delay the switch-back, an additional electronic part is required.
After market front camera	The front camera will automatically be switched for 10 seconds after disengaging the reverse gear. A manually front camera switching is possible by external keypad.
Guide lines and PDC	Displayed guidelines the optical PDC are not available in all vehicles.
Video input signal	NTSC video sources compatible only.

1.3. Connection Video-Interface

The video-interface converts the connected after-market sources video signals into an digital RGB signal which is inserted in the factory monitor using separate trigger options and it reads vehicle's digital signals out of the vehicle's CAN-bus and converts them for the video interface.

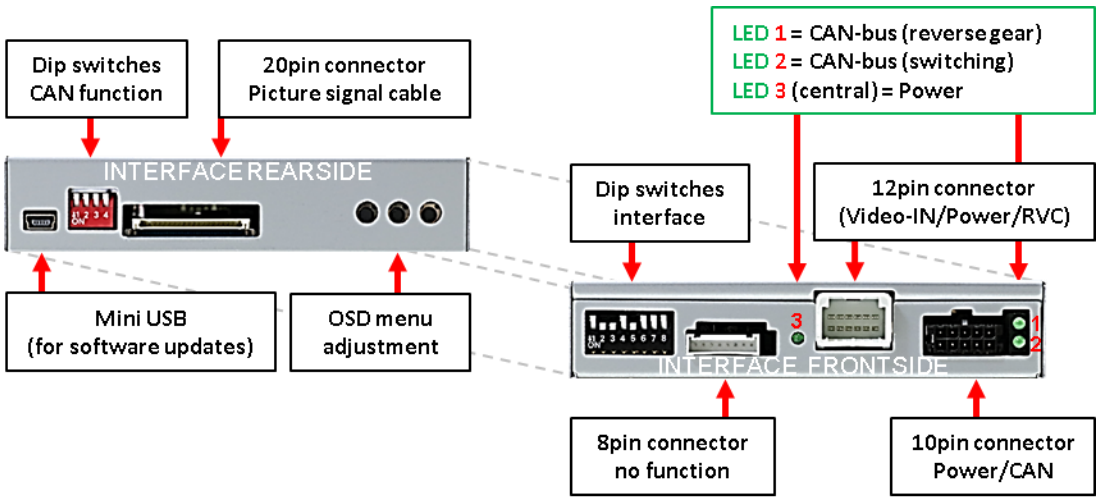

1.4. Settings of the 8 Dip switches (black)

Some settings have to be selected by the dip-switches on the video interface.
Dip position **down = ON** and position up = OFF.

Dip	Function	ON (down)	OFF (up)
1	Power supply output (red wire)	+12V (max. 3A) when reverse gear is engaged incl. 10 seconds delay and +12V by manual switching to front camera by keypad	+12V (max. 3A) ACC
2	CVBS AV1-input	enabled	disabled
3	CVBS AV2-input	enabled	disabled
4	No function		set to OFF
5	Rear-view cam type	after-market	factory or none
6	Frontcam back-switching for 10 seconds	Enabled*	disabled
7	No function		set to OFF
8	No function		set to OFF

*The front camera will automatically be switched for 10 seconds after disengaging the reverse gear.

See the following chapters for detailed information.

After each Dip-switch-change a power-reset of the Can-box has to be performed!

1.4.1. Adjustment – power supply output (dip 1)

If set to **ON**, the video interfaces' red wire will supply +12V (max 3A) with engaging the reverse gear and additionally 10 more seconds delay for the time of the front camera's back-switching after the reverse gear has been disengaged. Furthermore, the red wire's power supply for the front cam becomes active with manually front camera switching (short press of the external keypad).
If set to **OFF**, the video interfaces' red wire will supply permanent +12V ACC (max 3A).

Description of the power supply output: see chapter "Power supply output".

1.4.2. Enabling the interface's video inputs (dip 2-3)

Only the enabled video inputs can be accessed when switching through the interface's video sources. It`s recommended to enable only the required inputs for the disabled will be skipped when switching through the video-interfaces inputs.

1.4.3. Rear-view camera setting (dip 5)

If set to OFF, the interface switches to factory LVDS picture while the reverse gear is engaged to display factory rear-view camera or factory optical park system picture.
If set to ON, the interface switches to its rear-view camera input "Camera-IN" while the reverse gear is engaged.

1.4.4. Activating – front camera back-switching (dip 6)

If set to **ON**, the interface switches for 10 seconds from the rear-view camera to the front camera input after having disengaged the reverse gear. In addition, a manual switch-over to the front camera input is possible via keypad (short press) from any image mode.
(Attend to correct adjustment of the power supply output (dip1)!

Note: Dip 4, 7 and 8 are out of function and have to be set to **OFF**.

1.5. Settings of the 4 Dip switches (CAN function - red)

Dip position down is **ON** and position up is **OFF**.

Navigation / Sy5tem	Dip 1	Dip 2	Dip 3	Dip 4
R4.0 IntelliLink systems	OFF	OFF	OFF	OFF

Set all 4 dips to OFF.

After each Dip-switch-change a power-reset of the Can-box has to be performed!

2. Installation

To install the interface, first switch off the ignition and disconnect the vehicle's battery. Please read the owner`s manual of the car, regarding the battery`s disconnection! If required, enable the car`s Sleep-mode (hibernation mode)
In case the sleep-mode does not succeed, the disconnection of the battery can be done with a resistor lead.

As with any installation of retrofit equipment, a stand-by test is neccessary after the installation of the video interface, to ensure that the unit also switches off after reaching the vehicle's sleep mode.

Before the final installation, we recommend a test-run of the interface. Due to changes in the production of the vehicle manufacturer, there's always the possibility of incompatibility.

2.1. Place of connection

2.1.1. Place of connection – video-interface

The video-interface is performed to be installed at the backside of the head-unit.

2.1.2. Place of installation – daughter PCB

The daughter PCB is performed to be installed with an exchange housing plate behind the head unit's monitor panel.

2.2. Connection schema

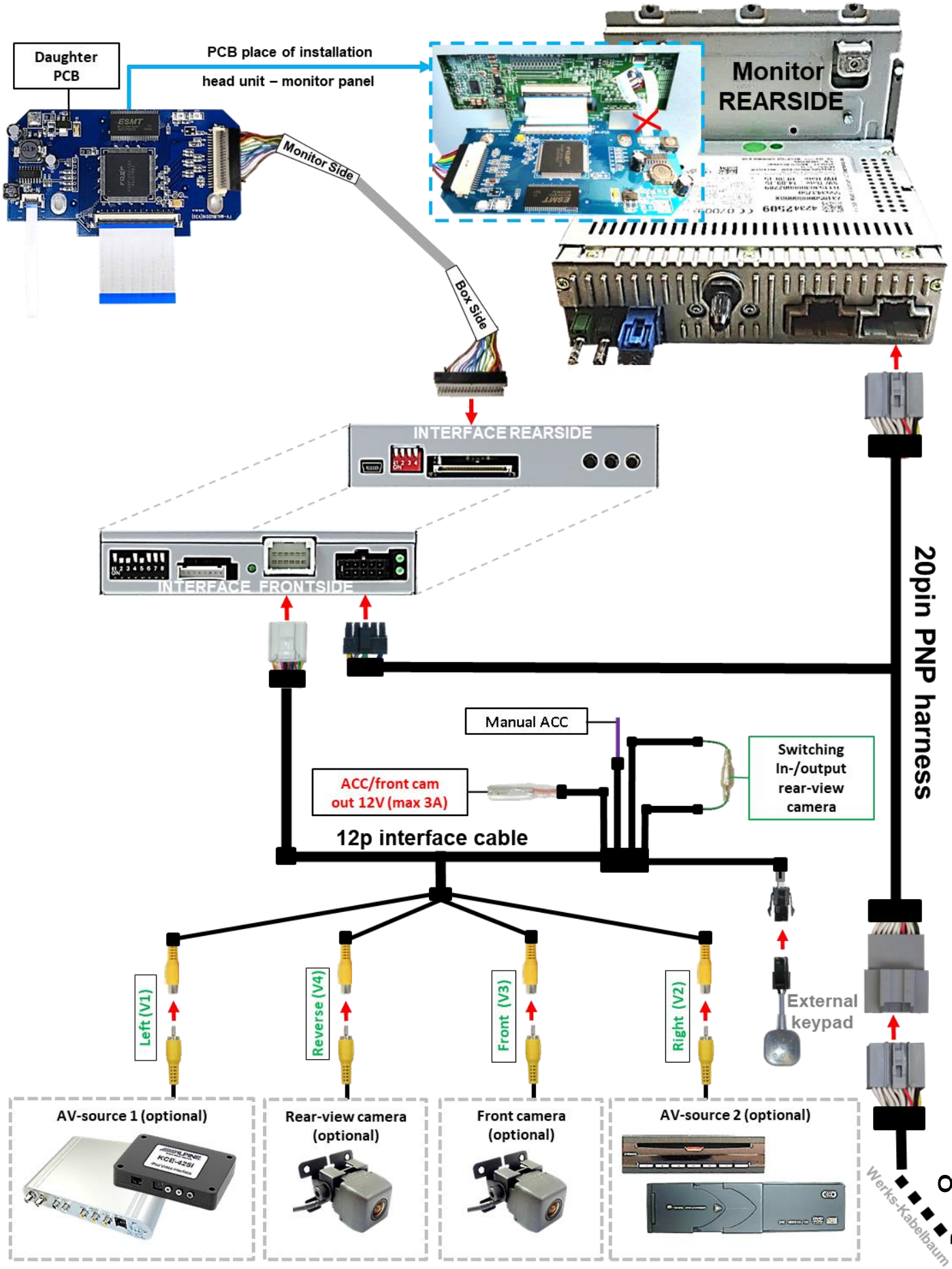

2.3. Connections to the head-unit

2.3.1. Installation of the Exchange – retaining plate and the daughter PCB

1 Remove the head-unit and further remove the original housing cover plate, which is fixed to the head-unit housing by 5 Torx screws (T9).

2 Turn out the 4 screws of the monitor retaining plate, after carefully unklipping the 66pin and the 9pin ribbon cables.
Note: The connected ribbon cables have to be handled with care to avoid each damage of the sensitive electrical inducters (Refer also to chapter “Connecting the ribbon cables”)

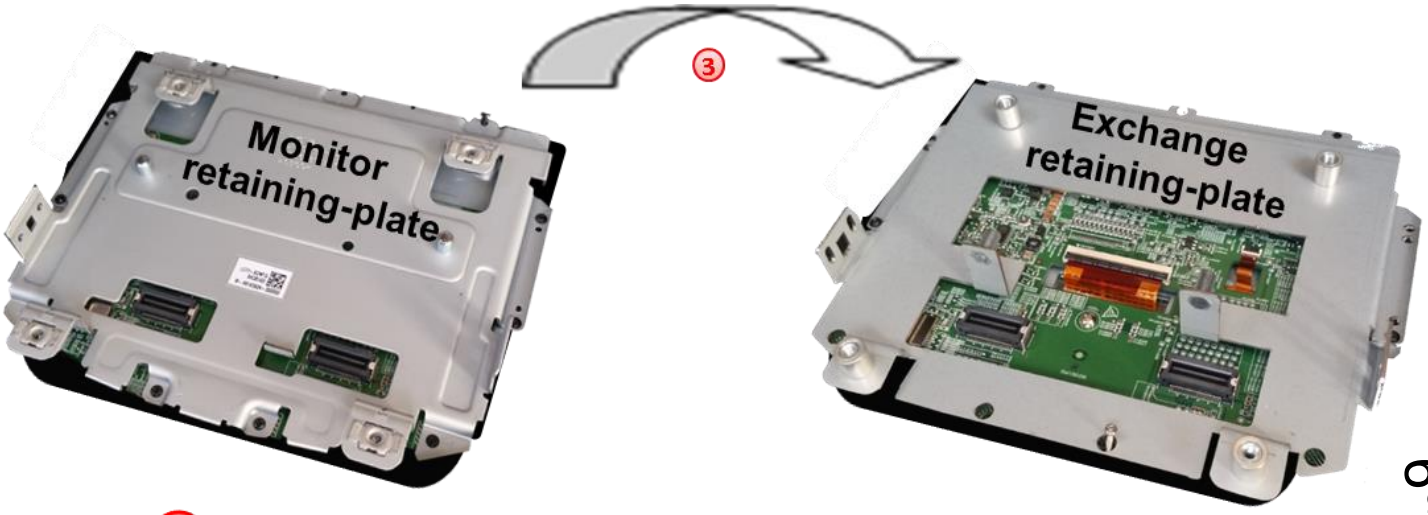

3 Remove the Original monitor retaining plate and replace it with the exchange retaining-plate by using the original screws.

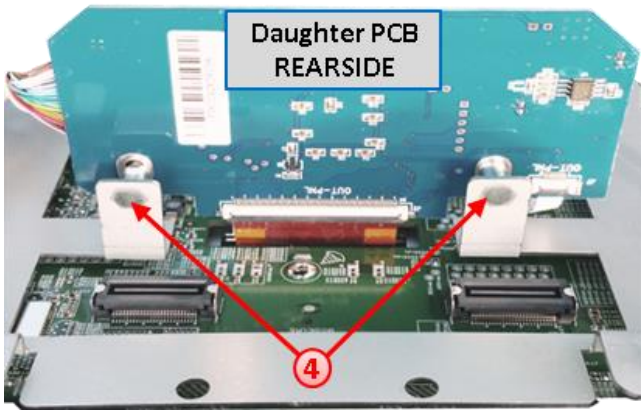

4 After connecting the ribbon cables, the daughter PCB has to be fixed with its rearside at the exchange retaining plate by using the enclosed 2 shorter screws.

Previous ribbon cable connection:
Read the following instructions!

2.3.2. Connecting the ribbon cables

2.3.2.1. Ribbon cable – 66pin

Daughter PCB ribbon cable „IN-PCB“ ⟶ Free ribbon cable base of monitor PCB

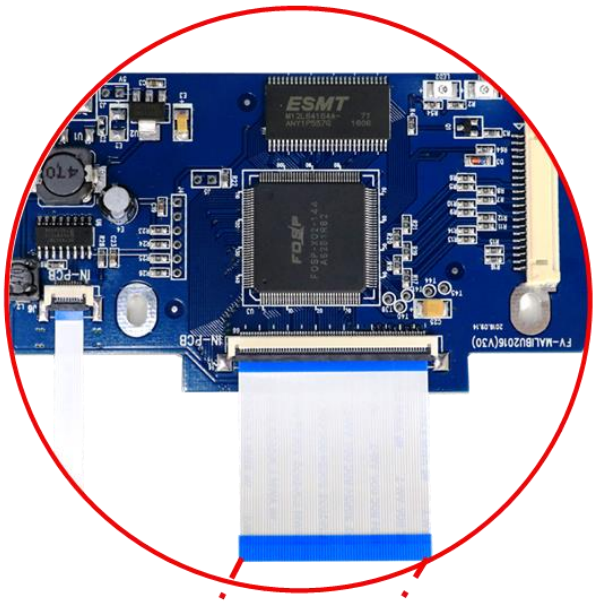

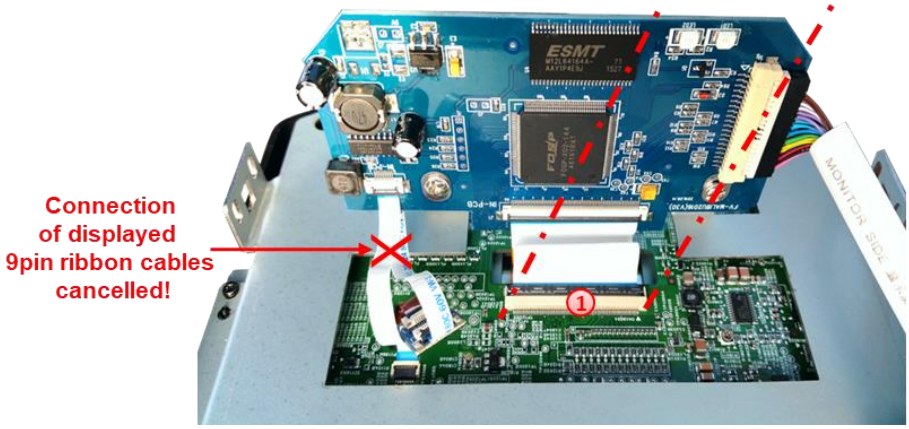

1 Connect the daughter PCB’s pre-assembeled 66pin ribbon cable „IN PCB“ to the previously become free ribbon cable base of the monitor mainboard (heed the following warning notes!).

PCB ribbon cable base „OUT-PNL“ → Free short ribbon cable - Monitor

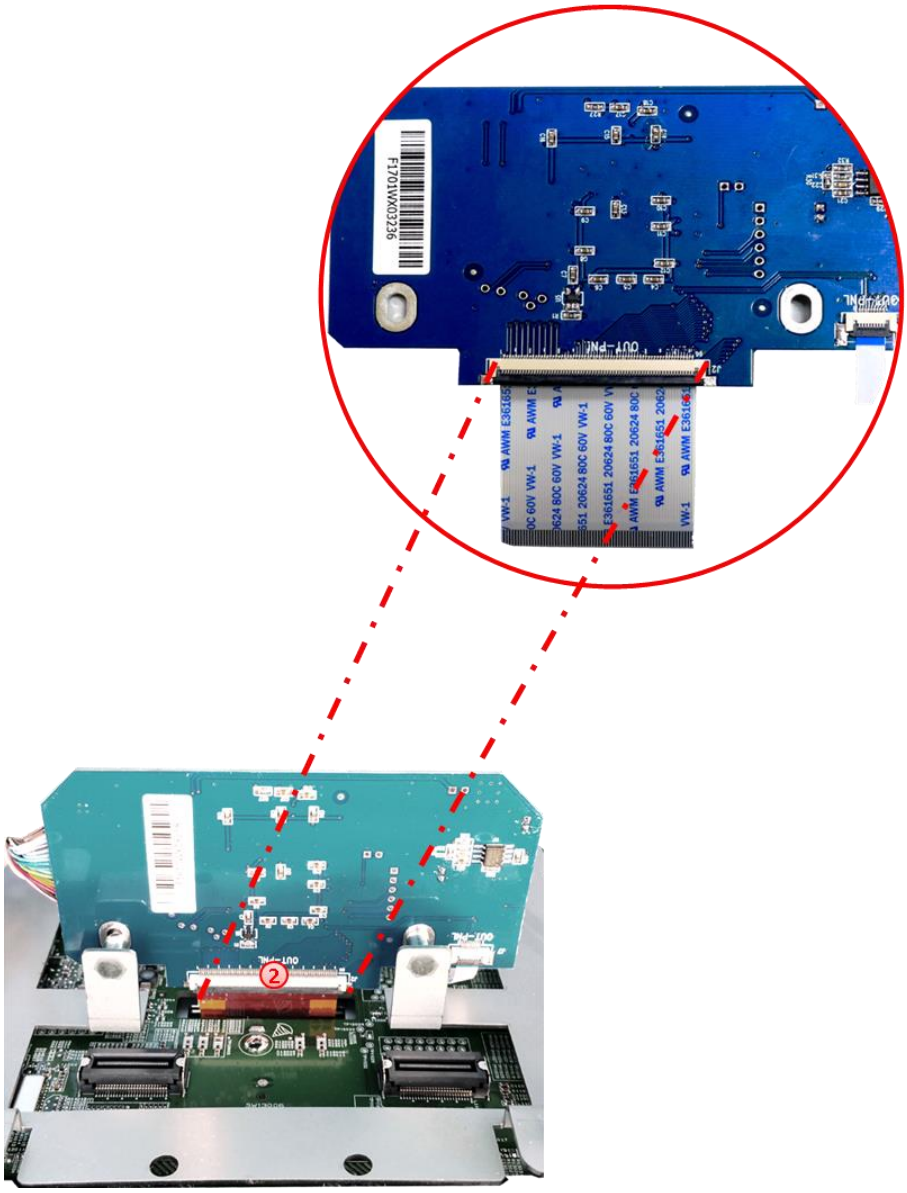

2 Connect and clip in the 66pin short, kopper-coloured ribbon cable which is led out from the monitor and connect it to the free ribbon cable base **„OUT-PNL“** of the daughter PCB’s rearside (heed the following warning notes!).

Note: Due to the very short length of the ribbon cable, there’s only limited space for mounting available In case, **the length of the original copper-coloured ribbon cable is too short for the installation, an additional ribbon cable and a ribbon cable merger are enclosed**, which can be used to extend the copper-coloured ribbon cable before connecting it to the daughter PCB.

(heed the following warning notes!).

2.3.2.2. Warning notes, concerning the installation of ribbon cables

1) The contacting ends of ribbon cables always have to be installed in a straight and precise 180° position to the connector. Each deviation from a perfect contact position will curse faulty contact and even danger of short circuit

2) The ribbon cable's contacting sides always have to correspond to the contacting sides of the connectors, concerning the mounting position.

3) Avoid cable contusion or cable injury caused by sharp-edged metal.

After a check of the perfect ribbon cable connection, fold back and clip in the head-unit housing to the monitor panel in reverse order. Then lead the LVDS cable out of the housing at a suitable location and fix the head units original housing cover plate at the exchange retaining plate, by using the enclosed 4 metal sleeves.

2.4. Connection from monitor to the video interface

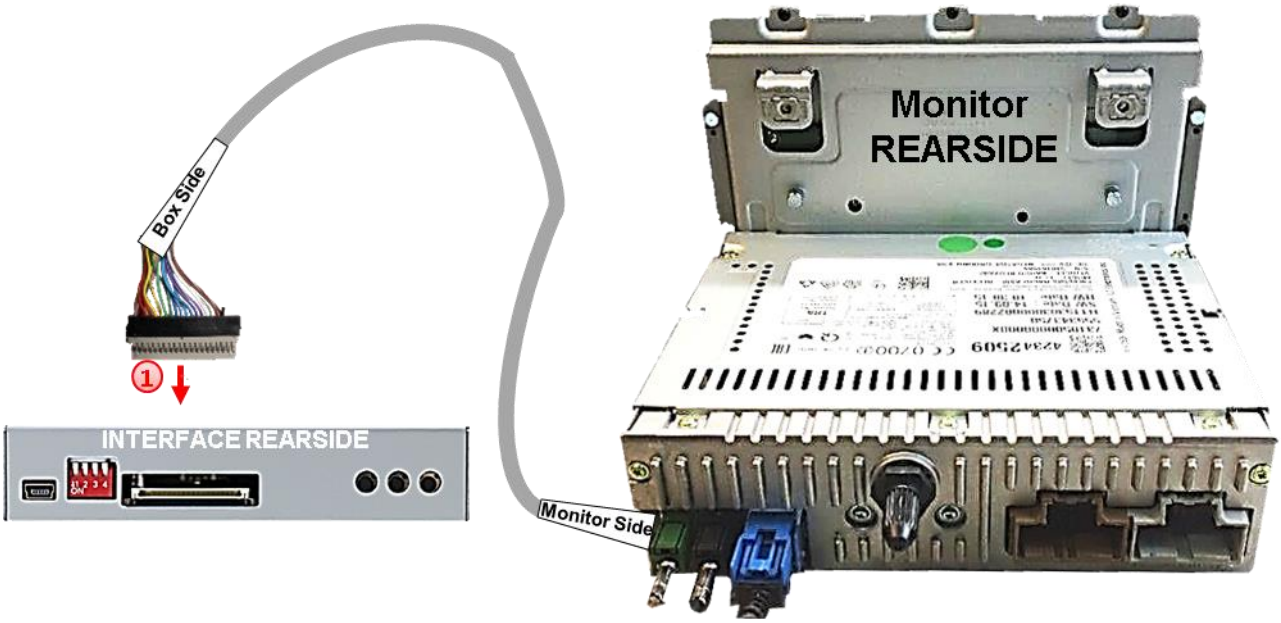

1 Connect the female 20pin LVDS connector of the LVDS cable which is led out of the head unit, to the male 20pin connector of the video interface.

2.5. Connection to the head unit – power / CAN

1. Connect the 12pin interface cable's female 12pin connector to the male 12pin connector of the video-interface.
2. Connect the female 10pin connector of the 20pin PNP harness to the male 10pin connector of the video interface
3. Remove the female 20pin connector of the vehicle harness from the rear side of the Head-unit and connect it to the male 20pin connector of the 20pin PNP harness.

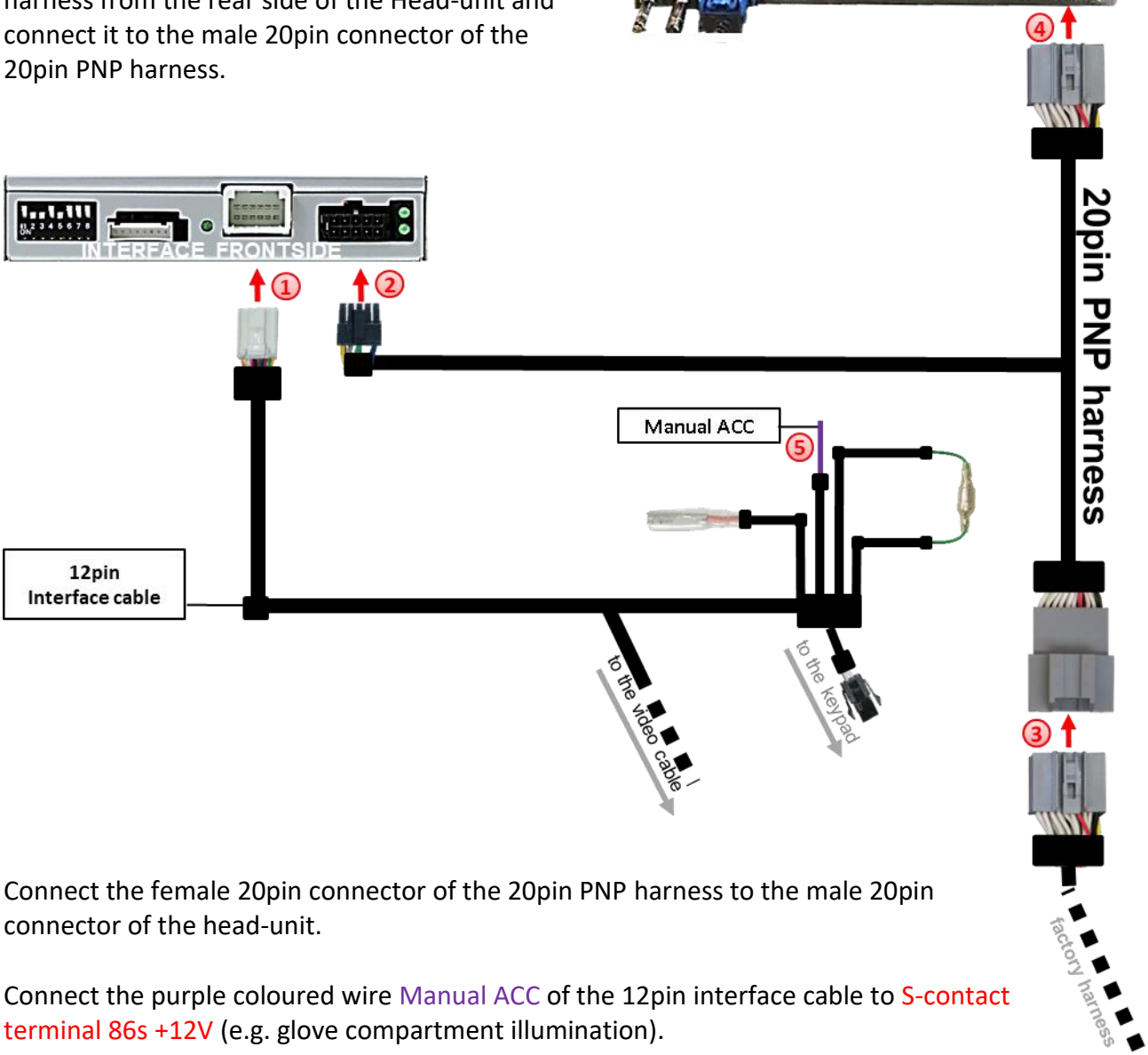

4. Connect the female 20pin connector of the 20pin PNP harness to the male 20pin connector of the head-unit.
5. Connect the purple coloured wire Manual ACC of the 12pin interface cable to S-contact terminal 86s +12V (e.g. glove compartment illumination).

If the interface does not power off (all LED off!) when vehicle is in sleep-mode, the yellow wire has to be cut and the wire's end which leads into the video-box has to be connected with external ACC.

2.6. Power supply output

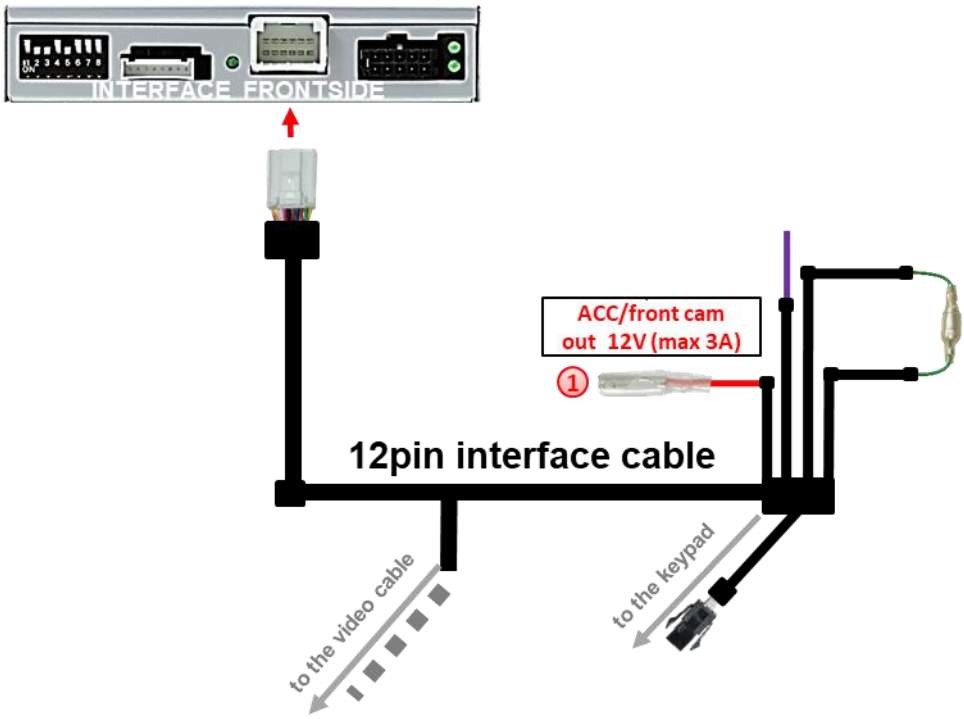

1 The red power supply output **ACC/front cam out 12V (max 3A)** can be used to power an external source and has a different assignment depending on the position of dip switch 1 (of the black 8 dips):

Dip	Function
Dip 1 **ON**	+12V (max. 3A) when reverse gear is engaged incl. 10 seconds delay after reverse gear is disengaged and +12V by manual switching to front camera by keypad (short press)
Dip 1 **OFF**	+12V (max. 3A) simulated ACC (while CAN has activity)

2.7. Connection - video sources

It is possible to connect an after-market rear-view camera, an after-market front camera and two more video sources to the video-interface.

Before the final installation, we recommend a test-run of the interface. Due to changes in the production of the vehicle manufacturer, there's always the possibility of incompatibility.

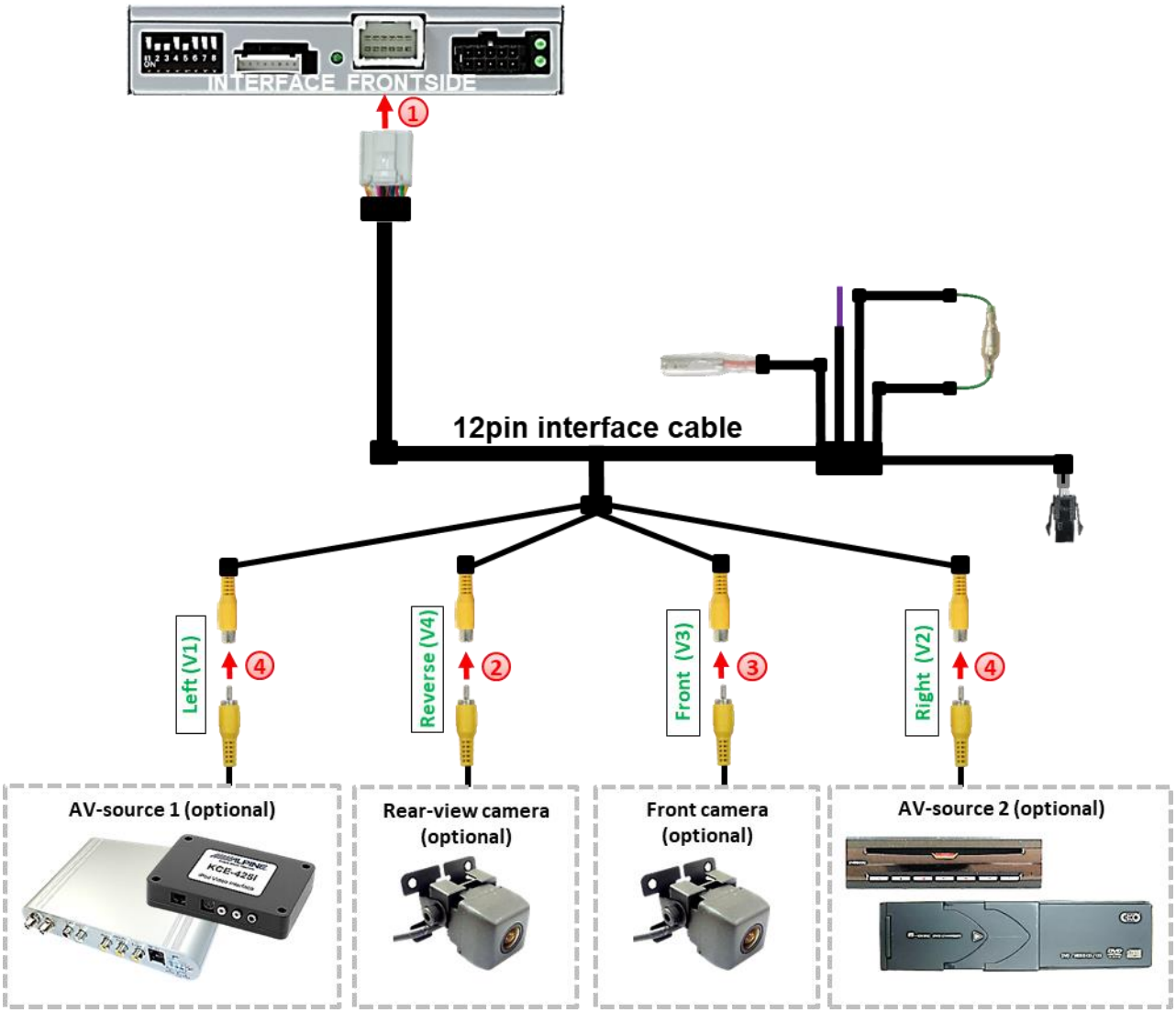

1. Connect the 12pin interface cable's female 12pin connector to the male 12pin connector of the video-interface.
2. Connect the video RCA of the Rear-view camera to the 12pin interface cable's female RCA connector **„Reverse V4**.
3. Connect the front camera's video RCA connector to the 12pin interface cable's female RCA connector **„Front V3"**.
4. Connect the video RCA of the AV source 1 and 2 to the 12pin interface cable's female RCA connector **"Left (V1)"** and **"Right (V2)"**.

2.7.1. Audio insertion

This interface can only insert video signals into the factory infotainment and switch audio signals. If an AV-source is connected to AV1 or AV2, the audio insertion has to be done by the factory audio AUX input or a FM-modulator to which the interface's sound-switch output is connected. The inserted video-signal can be activated simultaneously to each audio-mode of the factory infotainment. If 2 AV-sources shall be connected to the infotainment, for audio switching an additional electronic part is required.

2.7.2. After-market front camera

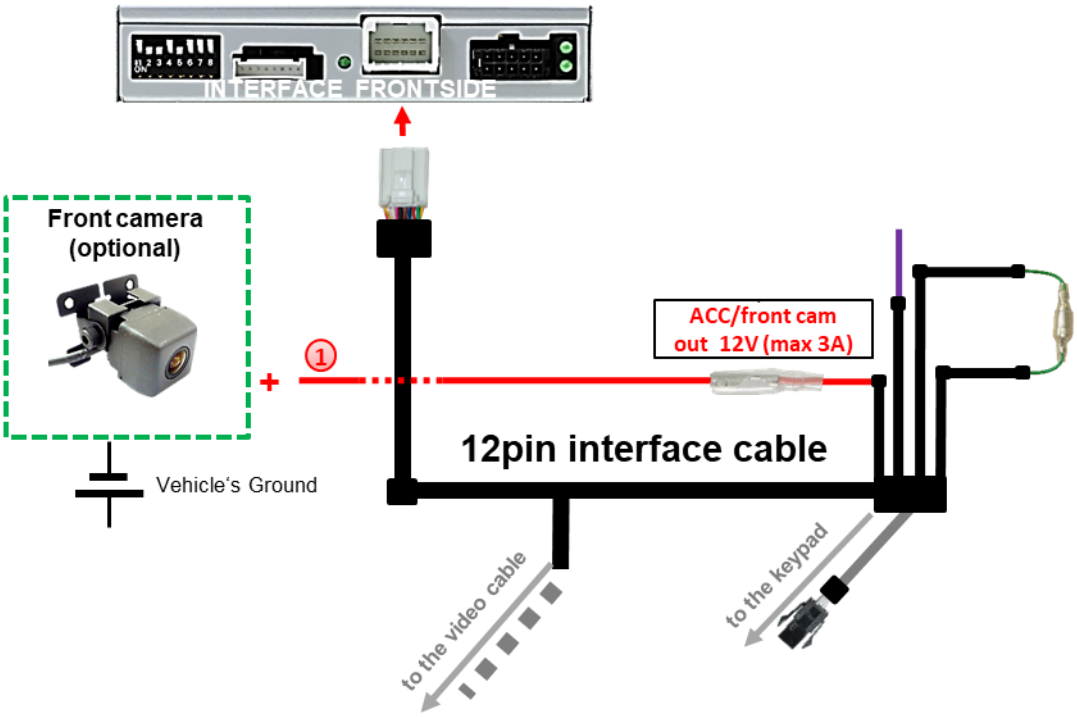

1 The red power supply output **ACC/front cam out 12V (max 3A)** can be used to power a front camera. If Dip 1 is set to ON (of the black 8 dips), the power supply output gives +12V (max 3A) when reverse gear is engaged incl. 10 seconds delay after reverse gear is disengaged.

Note: In addition, a manual switch-over to the front camera input is possible via keypad (short press) from any image mode. The power supply output gives +12V then, too (if Dip 1 is set to ON and the front camera input is selected).

2.7.3. After-market rear-view camera

Some vehicles have a different reverse gear code on the CAN-bus which the video-interface is not compatible with. Therefore, there are two different ways of installation. If the video interface receives a signal of the reverse gear, the green wire **"Reverse-OUT"** should carry +12V while the reverse gear is engaged.

Note: Do not forget to set dip5 of the video-interface to ON before testing.

2.7.3.1. Case 1: Video interface receives the reverse gear signal

If the CAN-bus interface receives +12V on the green wire of the 12pin interface cable when reverse gear is engaged, it will automatically be switched to the rear-view camera input "Camera IN" while reverse gear is engaged.

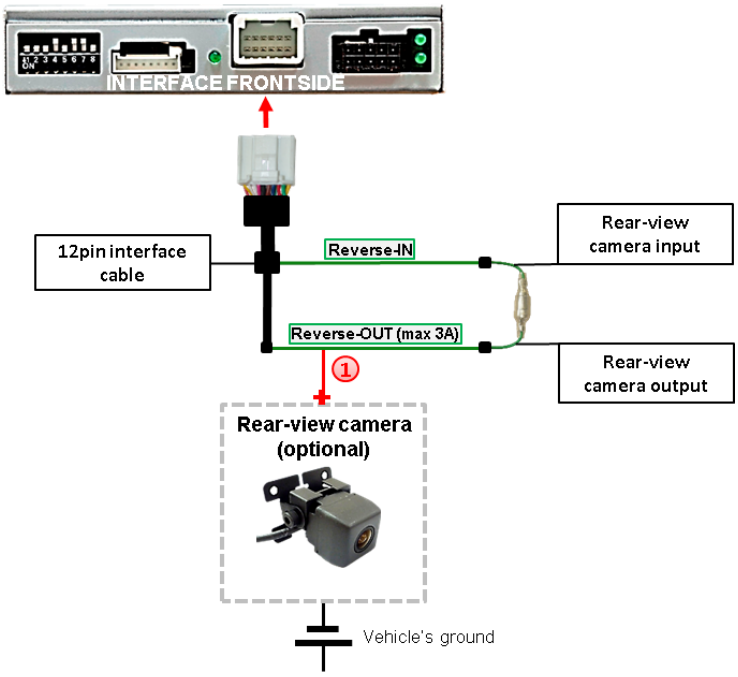

1 The 12 V power supply for the rear-view camera (max 3A) has to be taken from the green wire of the 12pin interface cable to avoid an unnecessary, permanent power supply to the camera electronic.
Both green cables "Reverse IN" and "Reverse OUT" have to remain connected.

2.7.3.2. Case 2: Video interface does not receive the reverse gear signal

If the video interface does not receive +12V on the green wire of the 12pin interface cable when reverse gear is engaged (not all vehicles are compatible), an external switching signal from the reverse gear light is required. As the reverse gear light's power supply isn't voltage-stable all the time, an ordinary open relay (e.g AC-RW-1230 with wiring AC-RS5) or filter (e.g. AC-PNF-RVC) is required. The diagram below shows the connection type of the relay.

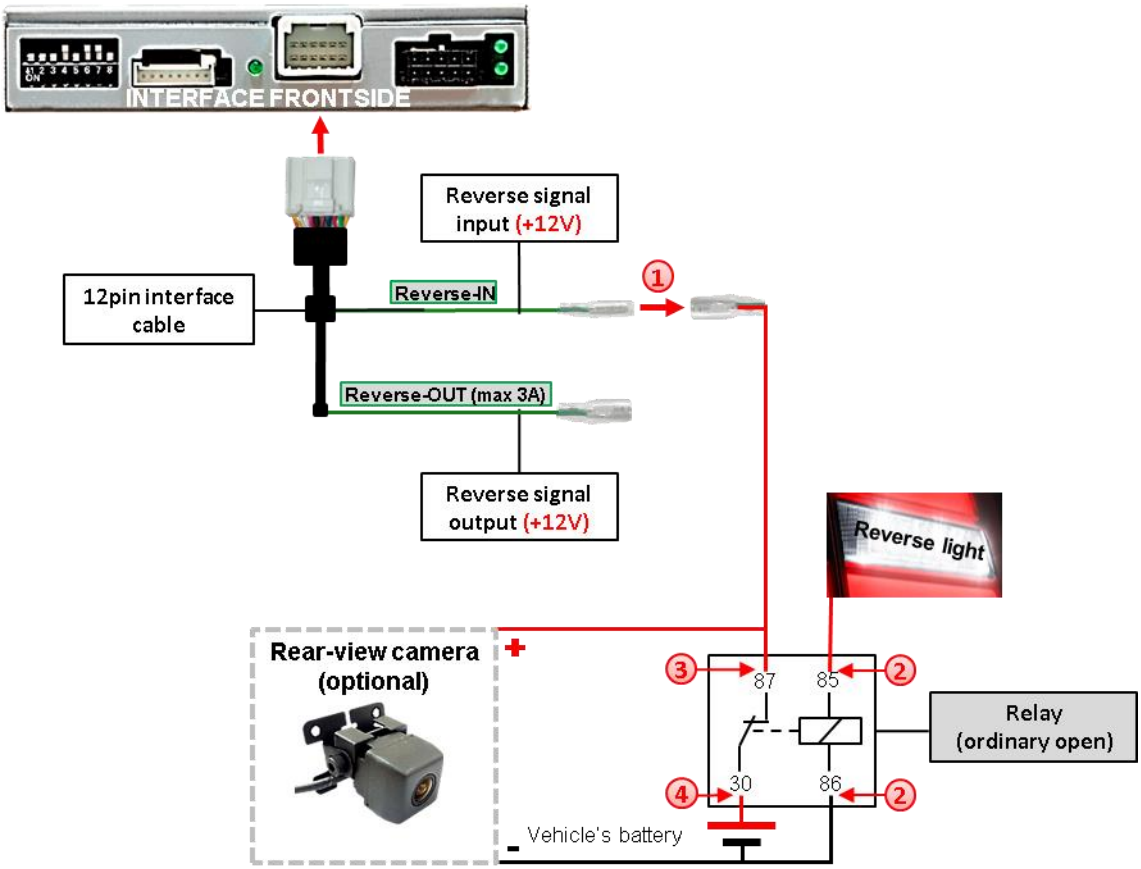

1. Disconnect the green cable's pre-connected male- and female connectors of the 12pin cable and connect the green input cable **"Reverse-IN"** to the output connector (87) of the relay.

   Note: Not least to avoid short circuits, the best solution should be, to crimp a male 4mm connector to the relay's output cable and connect it to the green cable's female 4mm connector. The output-cable **"Reverse-OUT"** remains disconnected as it's out of function.

2. Connect the Reverse light's power-cable to coil (85) and the vehicle's ground to coil (86) of the relay.

3. Connect the output connector (87) of the relay to the rear-view camera's power-cable, like you did it to the green **"Reverse-IN"** cable before.

4. Connect permanent power / 12V to the relay's input connector (30).

2.8. Connecting video-interface and external keypad

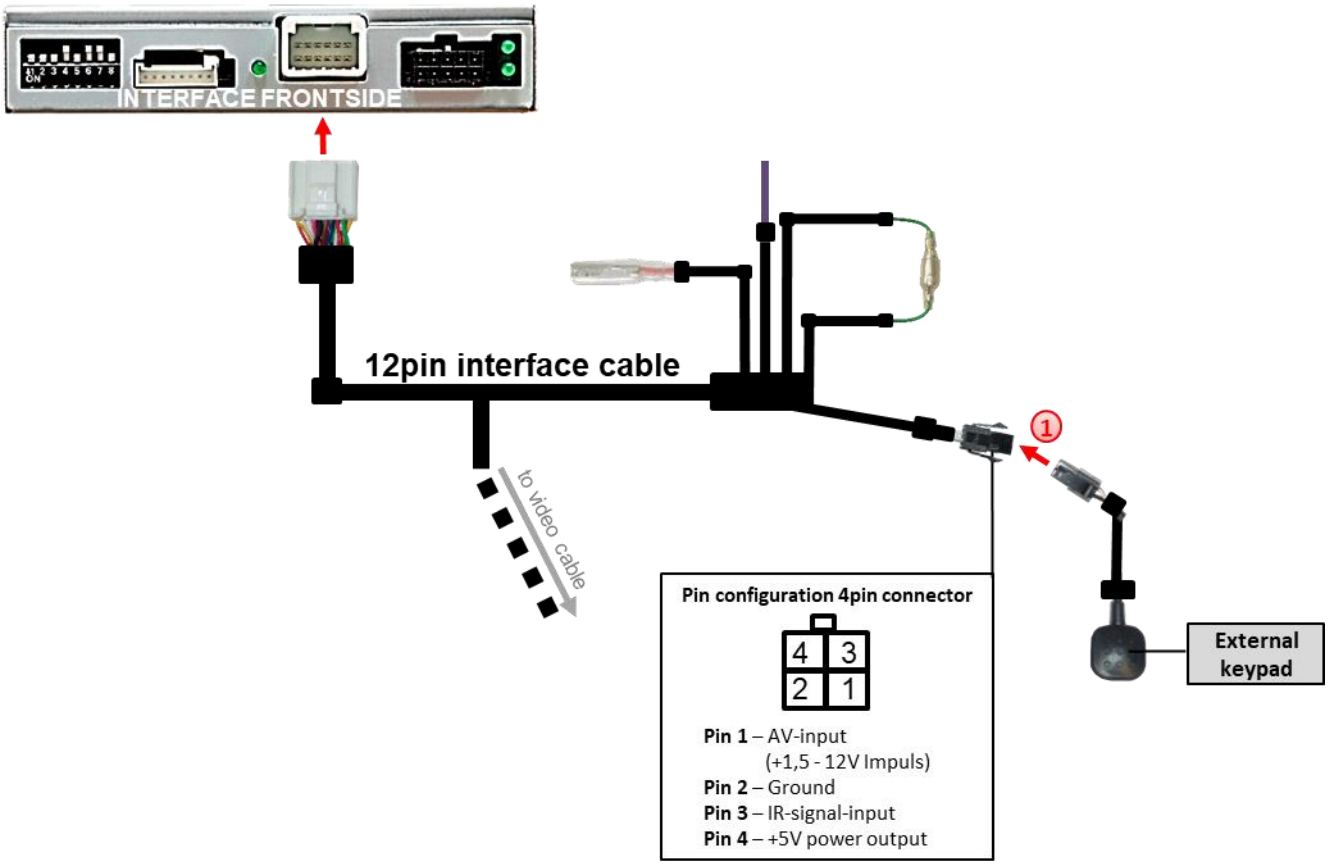

1 Connect the keypad's female 4pin connector to the video-interface's male 4pin connector.

Note: Even if the switching through several video sources by the keypad mightn't be required, the invisible connection and availability is strongly recommended.

2.9. Picture settings and guide lines

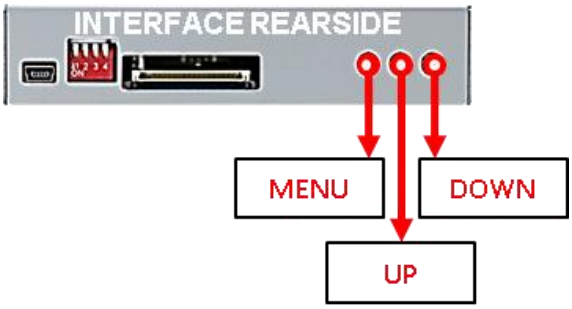

The picture settings are adjusted by the 3 buttons on the video-interface. Press the MENU button to open the OSD settings menu. To switch to the next menu item, pressing UP and DOWN will change the selected value. The buttons are embedded in the housing to avoid accidental changes during or after installation. The picture settings have to be done separately for AV1 and AV2 while the corresponding input is selected and visible on the monitor.

Note: The OSD menu is only shown when a working video source is connected to the selected video-input of the interface.

The following settings are available:

Contrast
Brightness
Saturation
Position H (horizontal)
Position V (vertical)
IR-AV1 (out of function)
IR-AV2 (out of function)
Guide-lines left
Guide-lines right
Guide lines (ON/OFF)

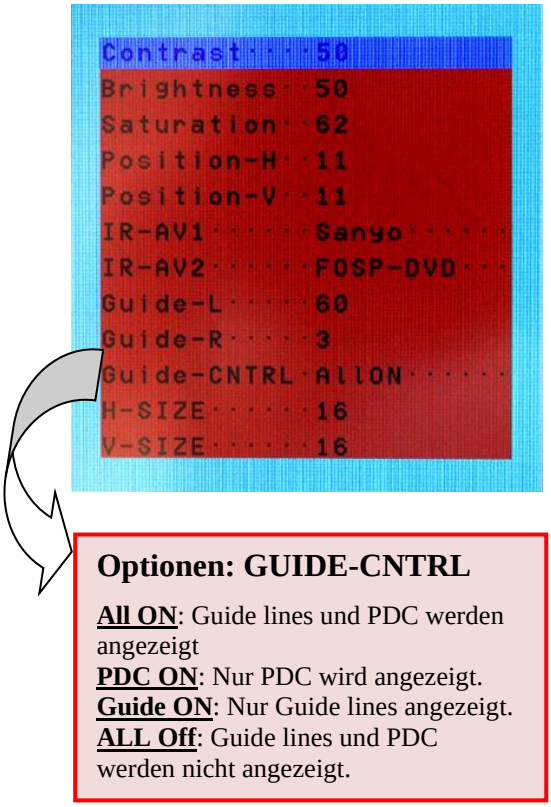

Note: If there is no communication between interface and the vehicle`s CAN-bus (several vehicles aren't compatible), the guide-lines and the optical PDC cannot be used.

3. Interface operation

3.1. By CALL OFF button

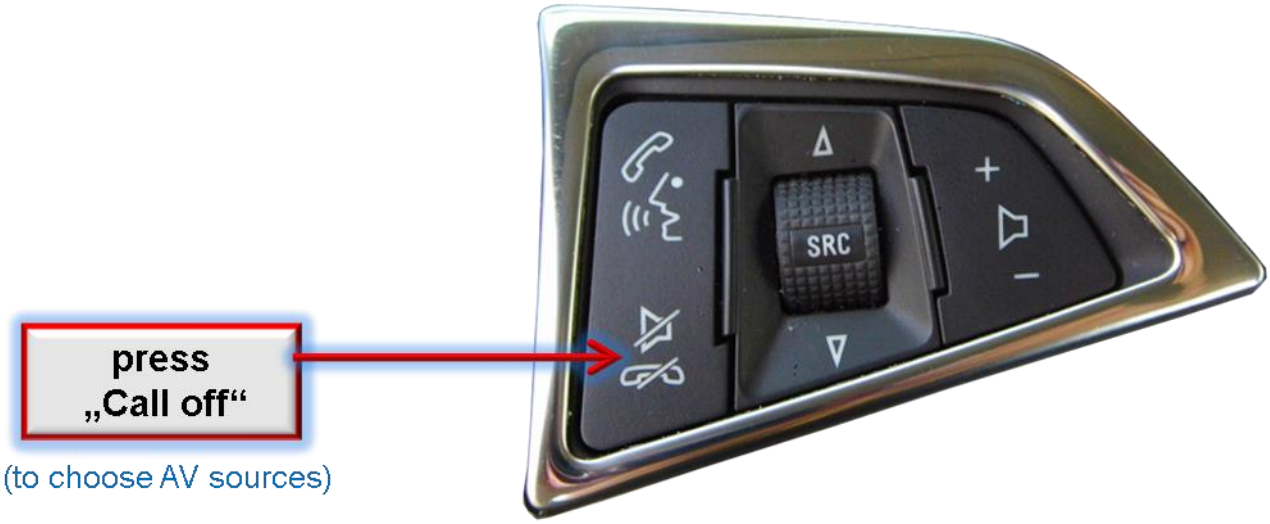

A press of the steering wheel's CALL OFF-button switches the input from factory mode to the inserted video sources. If, by dip switch setting, all inputs are enabled, the order is the following:

Factory video → video IN1 → video IN2 → factory video →…

By dip switch deactivated inputs will be skipped.

Switchover by vehicle buttons isn't possible in all vehicles. In some vehicles the external keypad has to be used.

3.2. By keypad

- Long press of keypad (2-3 seconds)

Alternatively or additionally to the steering wheel's CALL OFF button, the interface's enabled inputs can also be switched by the external keypad.

By long pressing the external keypad (2-3 seconds), the video interfaces witches the input from the factory video to the inserted video sources. If all inputs are activated by dip switch settings, the order is the following:

Factory video → Left (V1) → Right (V2) → factory video

Each long press will switch to the next enabled input. Inputs which are not enabled will be skipped.

Note: The interface switches after releasing the switch (after long pressure).

- Short press of keypad (only if DIP 1 is set to ON)

By short pressing the external keypad, the video interfaces witches from the factory video to the front camera input and back to factory video.

4. Specifications

BATT/ACC range	7V - 25V
Stand-by power drain	5mA
Power	100mA @12V
Video input	0.7V – 1V
Video input formats	NTSC
Temperature range	-40°C to +85°C
Dimensions Video-Box	118 x 26 x 90mm (W x H x D)

5. FAQ – Trouble shooting Interface functions

For any troubles which may occur, check the following table for a solution before requesting support from your vendor.

Symptom	Reason	Possible solution
No picture/black picture (factory picture).	Not all connectors have been reconnected to factory head-unit or monitor after installation.	Connect missing connectors.
	No power on CAN-bus box (all LED CAN-bus box are off).	Check power supply of CAN-bus box. Check CAN-bus connection of CAN-bus box.
	CAN-bus box connected to CAN-bus in wrong place.	Refer to the manual where to connected to the CAN-bus. If not mentioned, try another place to connect to the CAN-bus.
	No power on video-interface (all LED video-interface are off).	Check whether CAN-bus box delivers +12V ACC on red wire output of 8pin to 6pin cable. If not cut wire and supply ACC +12V directly to video-interface.
No picture/black picture/white picture (inserted picture) but factory picture is OK.	No picture from video source.	Check on other monitor whether video source is OK.
	No video-source connected to the selected interface input.	Check settings dips 1 to 3 of video interface which inputs are activated and switch to corresponding input(s).
	LVDS cables plugged in wrong place.	Double-check whether order of LVDS cables is exactly connected according to manual. Plugging into head-unit does not work when the manual says to plug into monitor and vice versa.
Inserted picture totally wrong size or position.	Wrong monitor settings of video-interface.	Try different combinations of dips 7 and 8 of video-interface. Unplug 6pin power after each change.
Inserted picture double or 4 times on monitor.		
Inserted picture distorted, flickering or running vertically.	Video sources output set to AUTO or MULTI which causes a conflict with the interfaces auto detection.	Set video source output fixed to PAL or NTSC. It is best to set all video sources to the same standard.
	If error occurs only after source switching: Connected sources are not set to the same TV standard.	Set all video sources to the same standard.
Inserted picture b/w.	Some interfaces can only handle NTSC input.	Check manual whether there is a limitation to NTSC mentioned. If yes, set source fixed to NTSC output.
Inserted picture qual. bad.	Picture settings have not been adjusted.	Use the 3 buttons and the interface's OSD to adjust the picture settings for the corresponding video input.
Inserted picture size slightly wrong.		
Inserted picture position wrong.		
Camera input picture flickers.	Camera is being tested under fluorescent light which shines directly into the camera.	Test camera under natural light outside the garage.
Camera input picture is bluish.	Protection sticker not removed from camera lens.	Remove protection sticker from lens.

Symptom	Reason	Possible solution
Camera input picture black.	Camera power taken directly from reverse gear lamp.	Use relay or electronics to "clean" reverse gear lamp power. Alternatively, if CAN-bus box is compatible with the vehicle, camera power can be taken from green wire of 6pin to 8pin cable.
Camera input picture has distortion.		
Camera input picture settings cannot be adjusted.	Camera input picture settings can only be adjusted in AV2 mode.	Set dip 3 of video-interface to ON (if not input AV2 is not already activated) and connect the camera to AV2. Switch to AV2 and adjust settings. Reconnect camera to camera input and deactivate AV2 if not used for other source.
Graphics of a car in camera input picture.	Function PDC is ON in the interface OSD.	In compatible vehicles, the graphics will display the factory PDC distance. If not working or not wanted, set interface OSD menu item UI-CNTRL to ALLOFF.
Chinese signs in camera input picture	Function RET or ALL is ON (function for Asian market) in the interface OSD.	Set interface OSD menu item UI-CNTRL to ALLOFF or PDCON.
Not possible to switch video sources by OEM button.	CAN-bus interface does not support this function for vehicle.	Use external keypad or cut white wire of 6pin to 8pin cable and apply +12V impulses for AV-switching.
	Pressed too short.	For video source switching a longer press of about 2.5 seconds is required.
Not possible to switch video sources by external keypad.	SW-version of interface does not support external keypad.	Use OEM-button or cut white wire of 6pin to 8pin cable and apply +12V impulses for AV-switching.
Interface does not switch to camera input when reverse gear is engaged.	CAN-bus interface does not support this function for the vehicles.	Cut the green wire of the 6pin to 8pin cable and apply +12V constant from reverse gear-lamp signal. Use relay to "clean" R-gear lamp power.
Interface switches video-sources by itself.	CAN-bus interface compatibility to vehicle is limited.	Cut the grey wire of 6pin to 8pin and isolate both ends. If problem still occurs, additionally cut the white wire of 6pin to 8pin cable and isolate both ends.

E57 10R-05 0068

Made in China